Racold

Reborn Everyday with Hot Water.

One-Time Investment!
Lifetime Savings,

**Subject to internal test conditions.

Heat Pump Water Heaters

70%** Savings

COEFFICIENT OF PERFORMANCE 4.25

www.racold.com

60+ YEARS OF EXCELLENCE

SELECTED Superbrands INDIA Consumer Validated 2021

About Ariston Thermo

Ariston Thermo is an international company among the leaders in water and environmental heating solutions. The Group develops and provides solutions that use renewable energy, such as thermal solar and heat pumps, with a continuous investment in innovation for the development of increasingly advanced connectivity systems.

In 2019, the Group posted a turnover of 1.71 billion euros and sales for 8.2 million products in more than 150 countries; counting 7,500 employees, 69 operating companies and 6 representative offices in 42 countries, 26 production sites in 15 countries and 24 centres of expertise for research and development in 15 countries. The Group offers a full range of products, systems and services mainly under the brands Ariston, ELCO, Chaffoteaux, Atag, Racold, Calorex, NTI, HTP.

The goal of Ariston Thermo is to look to the future of thermal comfort, offering an optimal combination of quality, energy savings and respect for the environment

About Racold

Racold is India's most trusted brand (as per Brand Trust Report 2016) and one of the largest provider of water heating solutions for over 60 years in India. It is a fully owned subsidiary of Ariston Thermo Group - Italy, the world leaders in the water and environmental heating solutions. Ever since its inception, Racold, has been setting standards in the Indian Water Heating Industry by bringing in new technology, enhancing the aesthetics, quality, safety, durability and performance of the product.

Racold has set a new benchmark in the industry for energy efficiency standards and has the distinction of being the only brand in the water heating category to win the prestigious BEE award for the 10th time in 2020. Racold is the only brand in the water heating category to be chosen as a Superbrand in 2019 & 2021.

Why Heat Pump Water Heaters?

- It uses 70% less electricity compared to conventional water heating solutions. It uses electricity only to move heat from one place to another instead of using it to generate heat. This results in 70% less electricity consumption.

70%**
Energy Savings

- Heat pump water heaters have a CoP (Co-efficient of performance) of 4.25*, meaning that the energy produced in the form of hot water is 4.25* time more than that is consumed.
- By comparison, electric water heaters have a CoP of less than 1, resulting in heat pump water heaters giving an annual saving of approx. ₹ 10,000/-^

^Savings are calculated @ ₹ 10 per unit, subject to internal lab test conditions.

*Only Available in 300 Ltr Capacity.

How Does It Work?

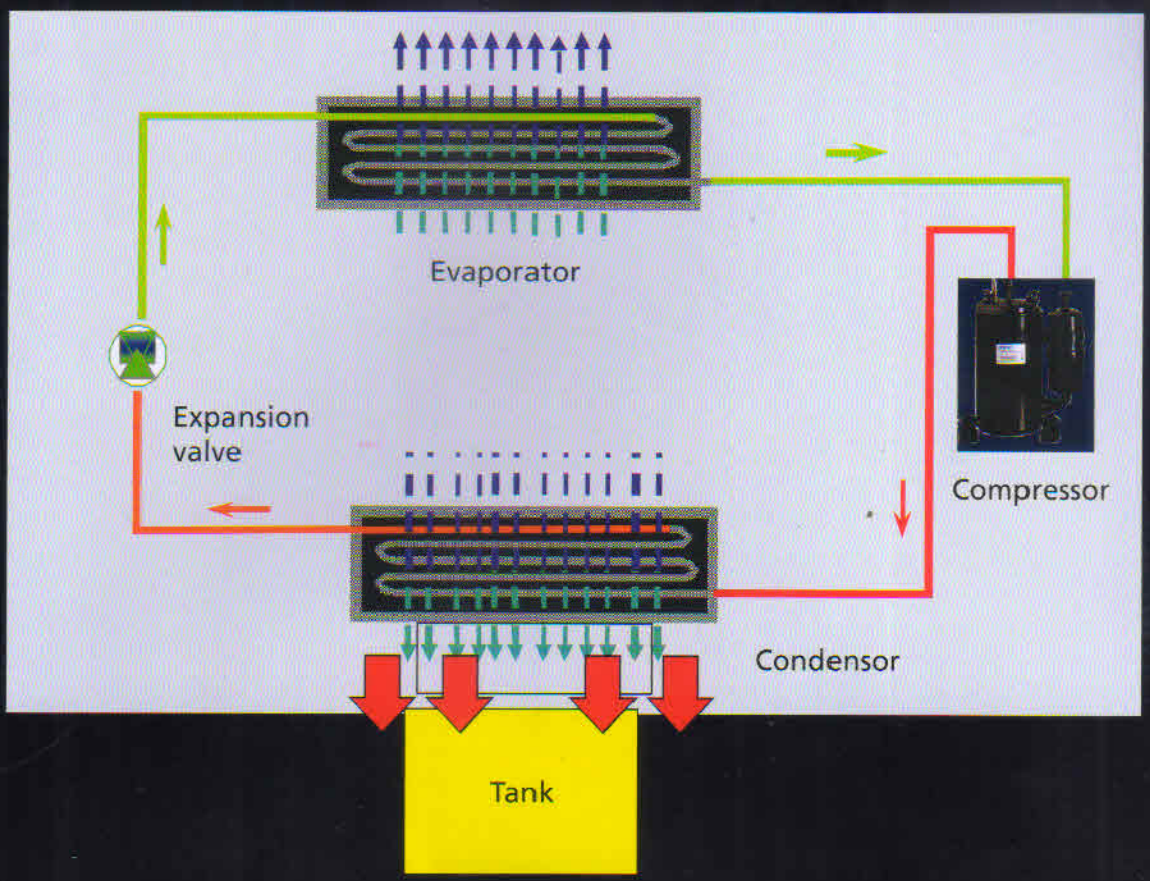

Thermodynamic Cycle:

- External air is sucked inside the heat pump with the help of a fan.
- Since the refrigerant in the evaporator is kept at a lower temperature than the surrounding atmosphere, it absorbs heat from the surroundings and evaporates.
- The compressor compresses the gaseous refrigerant and raises the pressure and temperature of the refrigerant.
- The heated refrigerant runs through the condenser coil wrapped around the storage tank, transferring the heat to the water stored there and it cools and condensates.
- The refrigerant then passes through an expansion valve where the pressure and temperature is reduced further for the whole process to start again.

Features:

Isolated Safe Condenser:
Designed according to European standards, this ensures safety and superior conduction of heat.

Magnesium Anode:
Protects your water heater and gives it long life.

High Efficiency Compressor:
It ensures faster heat exchange, more hot water and increased savings.

Quick Heating:
In this option the water heater will work in both Heat Pump and Heating Element mode, giving instant hot water.

Titanium Enameled Tank:
A new technology which uses titanium enamelling for the inner container ensures greater corrosion resistance against hard water.

Intelligent Controller:
Temperature and the time when hot water is required can be easily set via smart digital controller.

Technical Specifications#:

S. No.	Model	150 Ltrs.	200 Ltrs.	300 Ltrs.
1	Capacity (Ltrs.)	150	200	300
2	Product Configuration	Split		Separated
3	CoP**	3.8		4.25
4	Noise level in DB (1 meter as per standard)	52		
5	Operating Pressure (Bar)	8		
6	Heating Element (KW)	1.8		1+1.5
7	Refrigerant	R134a		
8	Tank net weight-without water (Kgs)	50	75	100/34
9	Product dimensions (mm)	495 x 1486	510x1894	650 x 1491
10	Mains Electrical Connection (V/Hz)	(198264)V/50Hz		50
11	Anode	Mg		Yes
12	Maximum Temperature Setting - HP Mode (°C)	55		62
13	Maximum Temperature Setting with Electrical Heating Element (°C)	75		
14	Rated Hot Water Output* (Ltr Per Hour)	112	100	101
15	Power Output (W)	2600		2850
16	Power Input (W)	720		620
17	Volume @ 40° C (Ltrs.)	209	282	

#Environment DB/WB 20/15°C, water temperature ranges from 15°C to 55°C.
*The calculated heating time is considering inlet water temperature @ 20°C.

**Subject to internal test conditions.

Comparative Analysis*:

Parameters	Heat Pump Water Heater	Electric Water Heater
Operating Cost (%)	28	100
Place of Installation	Any place	Any place
Source of Energy	2/3 from atmosphere (renewable energy) + 1/3 from electrical power	Electrical power
Temperature of Hot Water	55°C	60° C to 70° C
Climatic Constraints	None (Works throughout the year)	None (Works throughout the year)

***Capacity - 150 Ltrs. water**

Product Line Diagram:

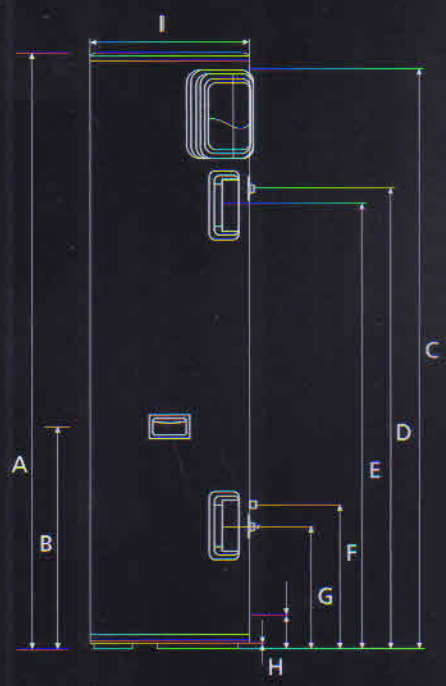

Split Unit:

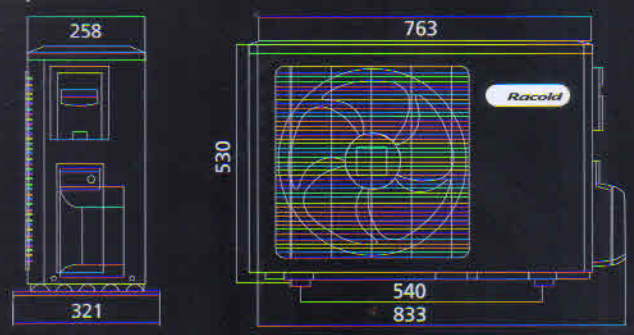

Split 150 Ltrs. / 200 Ltrs.

Model	A	B	C	D	E	F	G	H	I
150	1486	670	1429	1024	1004	414	364	17	495
200	1894	705	1841	1462	1409	460	390	17	510

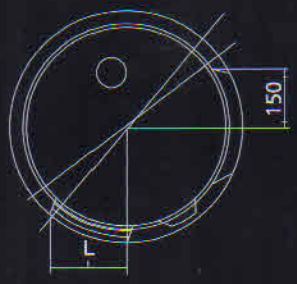

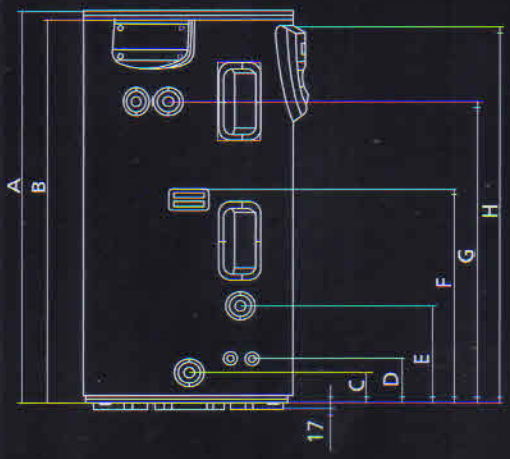

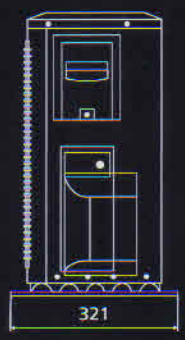

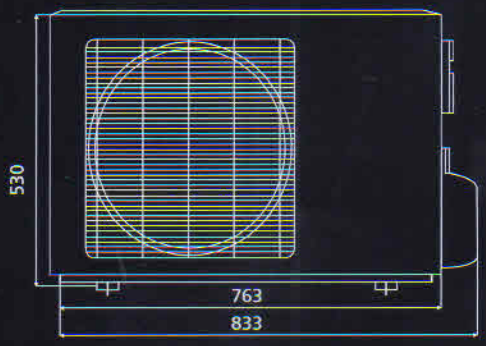

Model	A	B	C	D	E	F	G	H	J	K	L	M(°)	N(°)
HF300/27H SPLIT-IN	1491	1457	96	155	310	593	1197	1433	717	650	223	53	60

Inner Tank	5 yrs
Compressor	
Product	2 yrs

Chlorofluorocarbon Free

Frequently Asked Questions (FAQ's):

1) Why should I use a Heat Pump Water Heater instead of Electrical Storage Water Heater?

- Heat Pump Water Heater can save more than 70% of electricity when compared to a normal Electric Water Heater. Electricity is used to run the compressor and not to heat the water.

2) Where should I install a Heat Pump Water Heater?

- Heat Pump Water Heater can be installed in a bathroom, balcony, kitchen, storeroom, etc., virtually anywhere in the house without affecting the outlook of the building.

3) What is the heat source of the Heat Pump Water Heater?

- It draws heat from air (atmosphere) so that product continues to supply hot water in all weather conditions irrespective of the water heater location.

After-sales service:

Racold leads the way in service support with:

- Nationwide service technicians with over 300 service centres.
- Use of genuine Racold spare parts.

Racold is a registered trademark of Ariston Thermo Spa, Italy.

Customer Care: **1860 425 2288 / 8600 25 6000**

Email: customer.care@racold.com | **WhatsApp number: 7362 888 999** 24-7

An ISO 9001 : 2008 Certified Company

Marketed by:
Ariston Thermo India Private Limited, 2nd Floor, Eastern Wing, Nyati Unitree, Nagar Road, Yerwada, Pune - 411006, Maharashtra, India.
Tel: (020) 6740 9900 | www.racold.com